WNG Modern Without Cushion
(Compatible with Renner Geometry)

When mounted on WNG Rails will replace a Standard
Renner action with no modification to the keyboard

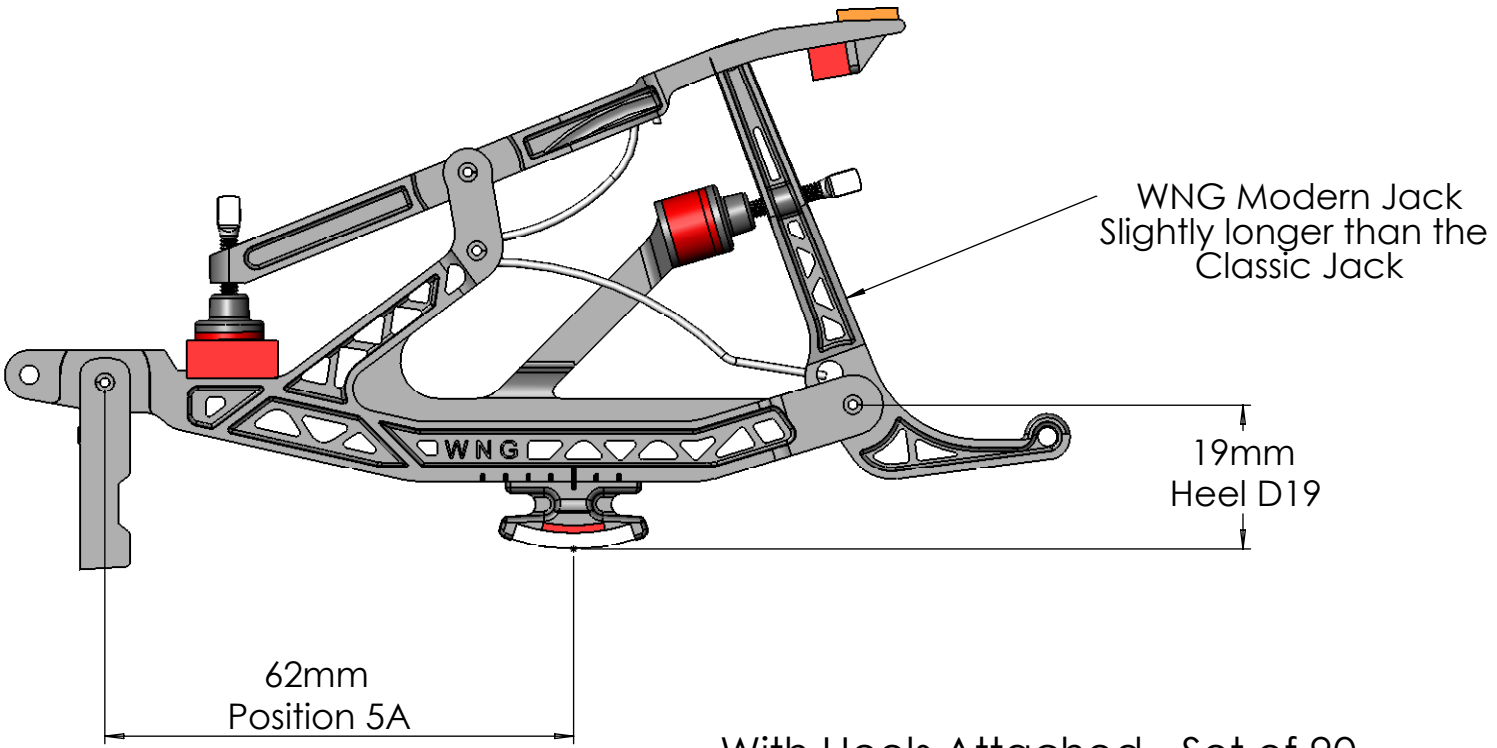

With Heels Attached - Set of 90
Part No. 06-5031

Without Heels Attached - Set of 90
Part No. 06-5032